SCHALTBILDER

DZR 50/6 B

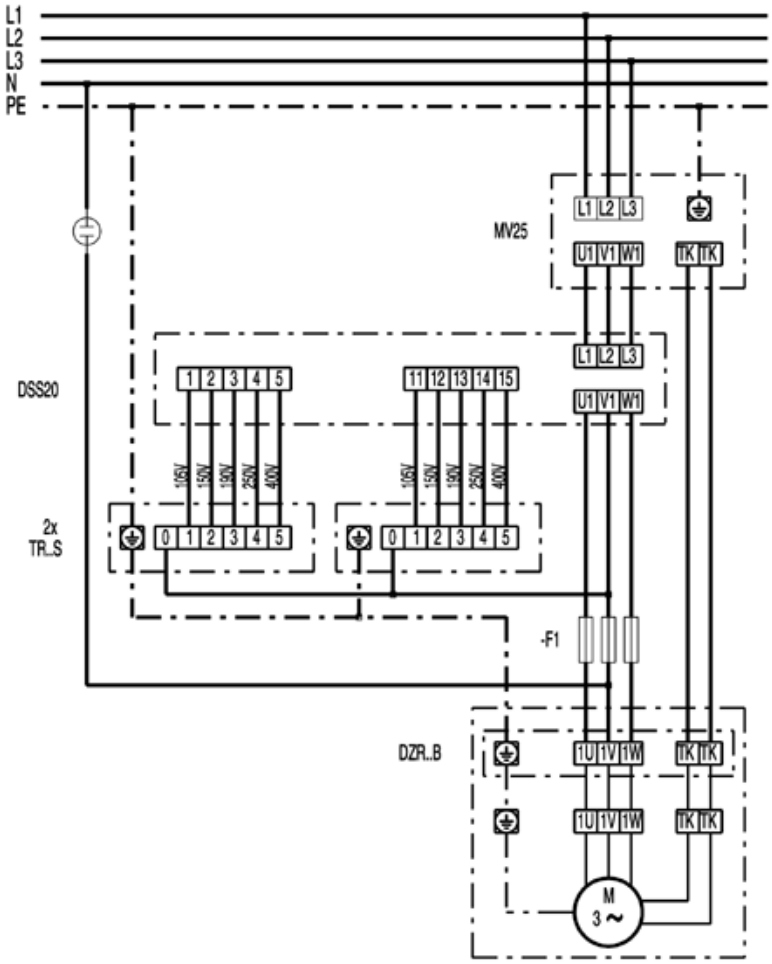

DZR 50/6 B

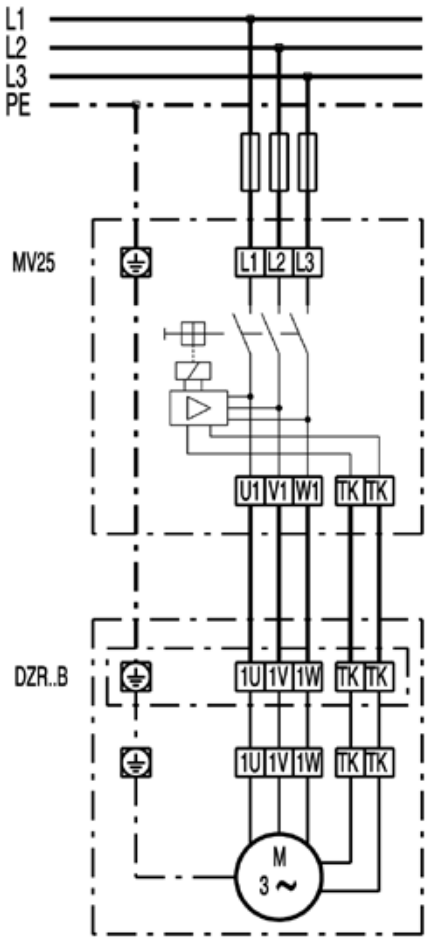
L1
L2
L3
PE
MV25
L1
L2
L3
U1
V1
W1
TK
TK
DZR..B
1U
1V
1W
TK
TK
1U
1V
1W
TK
TK
M
3 ~

DZR 50/6 B

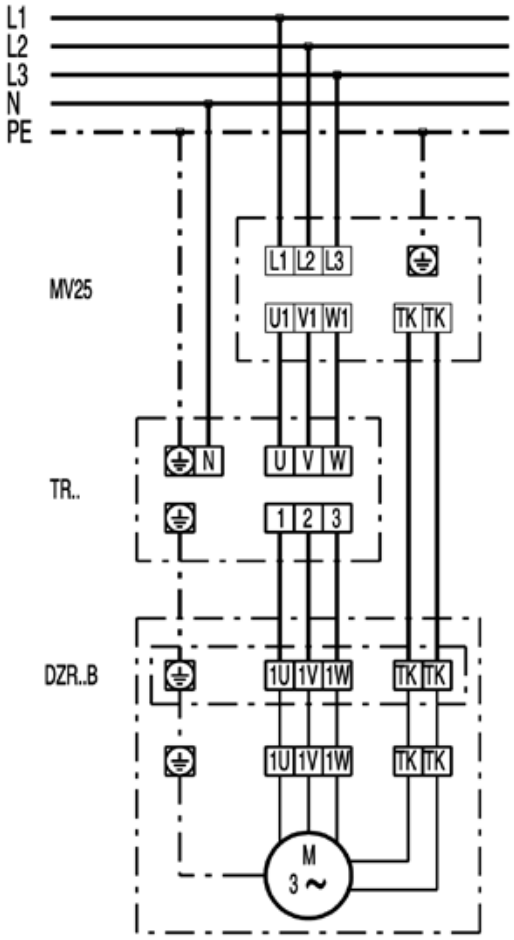
L1
L2
L3
N
PE
MV25
L1 L2 L3
U1 V1 W1
TK TK
TR..
N
U V W
1 2 3
DZR..B
1U 1V 1W
TK TK
1U 1V 1W
TK TK
M
3 ~

DZR 50/6 B

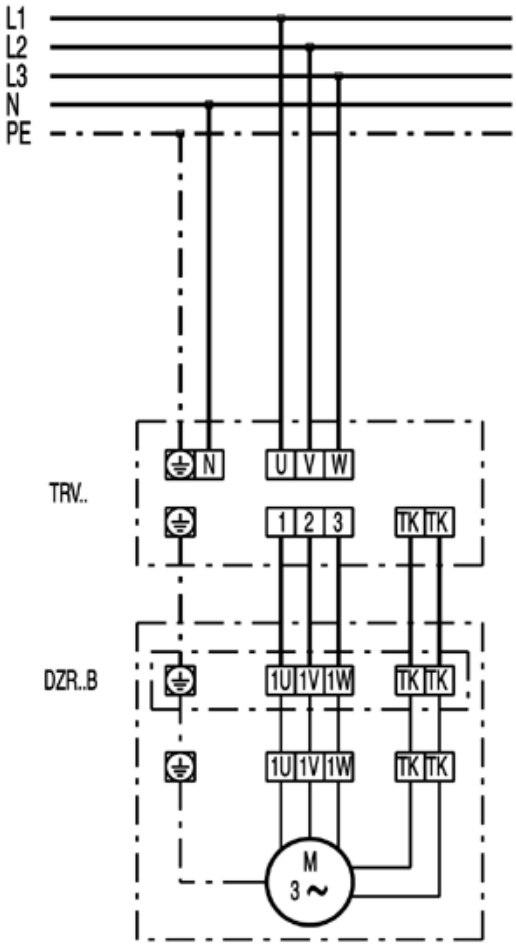

DZR 50/6 B

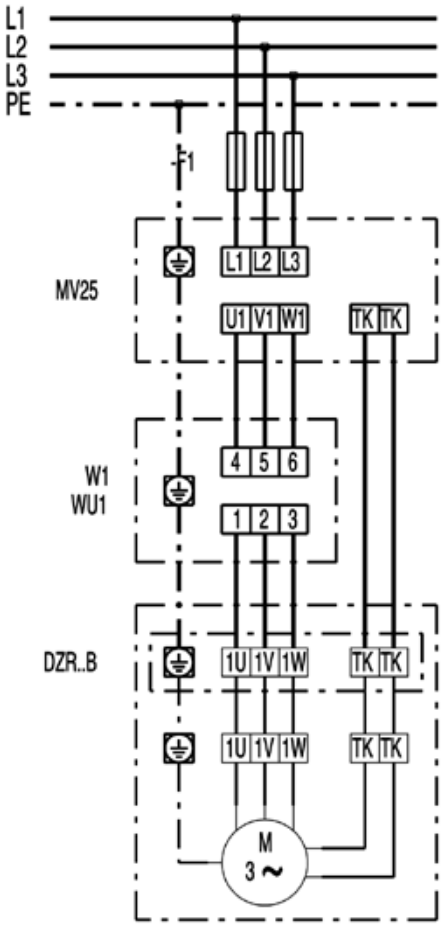
L1
L2
L3
PE
F1
MV25
L1 L2 L3
U1 V1 W1
TK TK
W1
WU1
4 5 6
1 2 3
DZR..B
1U 1V 1W
TK TK
1U 1V 1W
TK TK
M
3 ~